Cambridge Assessment International Education
Cambridge International General Certificate of Secondary Education

CANDIDATE NAME	
CENTRE NUMBER	
CANDIDATE NUMBER	

PHYSICS **0625/42**

Paper 4 Theory (Extended) **February/March 2019**

1 hour 15 minutes

Candidates answer on the Question Paper.

No Additional Materials are required.

READ THESE INSTRUCTIONS FIRST

Write your centre number, candidate number and name on all the work you hand in.
Write in dark blue or black pen.
You may use an HB pencil for any diagrams or graphs.
Do not use staples, paper clips, glue or correction fluid.
DO **NOT** WRITE IN ANY BARCODES.

Answer **all** questions.
Electronic calculators may be used.
You may lose marks if you do not show your working or if you do not use appropriate units.
Take the weight of 1.0 kg to be 10 N (acceleration of free fall = 10 m/s^2).

At the end of the examination, fasten all your work securely together.
The number of marks is given in brackets [ ] at the end of each question or part question.

This syllabus is regulated for use in England, Wales and Northern Ireland as a Cambridge International Level 1/Level 2 Certificate.

This document consists of **14** printed pages and **2** blank pages.

DC (ST/CT) 167383/5
© UCLES 2019

Cambridge Assessment International Education

[Turn over

www.root19.com +91 - 9969 353 391

1 **(a)** Define *acceleration*.

..... [1]

(b) Fig. 1.1 shows the distance-time graph for the journey of a cyclist.

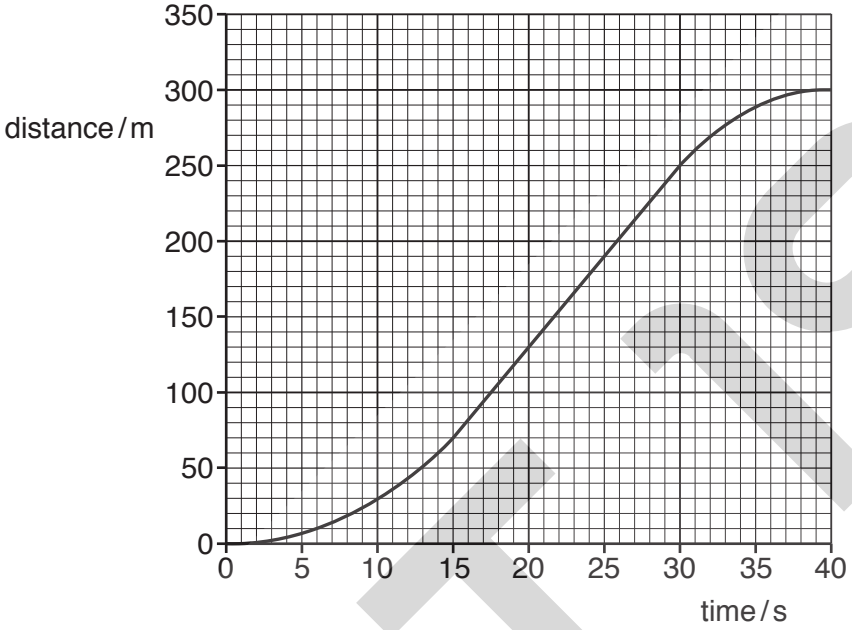

Fig. 1.1

(i) Describe the motion of the cyclist in the time between:

1. time = 0 and time = 15 s

.....

2. time = 15 s and time = 30 s

.....

3. time = 30 s and time = 40 s.

.....
[3]

(ii) Calculate, for the 40 s journey:

1. the average speed

average speed = ... [2]

2. the maximum speed.

maximum speed = ... [2]

[Total: 8]

© UCLES 2019
www.root19.com

+91 - 9969 353 391

2 **(a)** State **one** advantage and one disadvantage of using a wind turbine as a source of electrical energy.

advantage .....

disadvantage .....
[2]

(b) Fig. 2.1 shows a wind turbine.

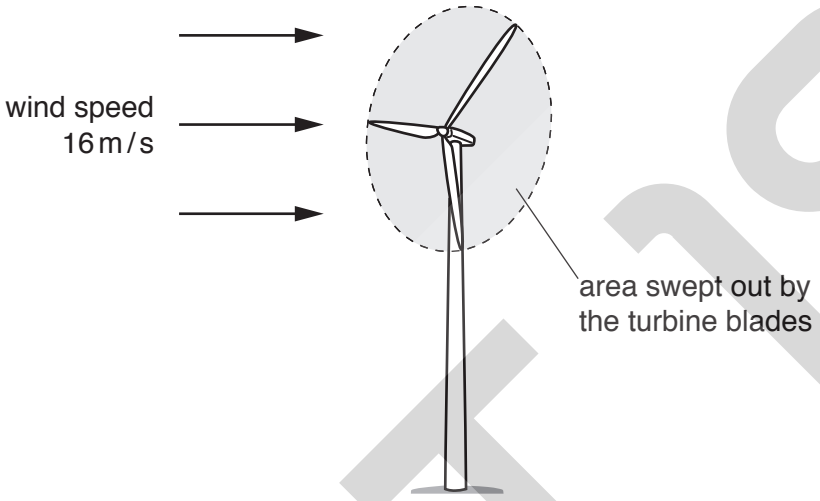

Fig. 2.1

(i) The wind blows at a speed of 16 m/s towards the turbine blades. In one second, a volume of 24 000 m^3 of air passes through the circular area swept out by the blades. The density of air is 1.3 kg/m^3.

Calculate:

1. the mass of air that passes through the circular area swept out by the blades in 1.0 s

mass = ... [2]

2. the kinetic energy of the mass of air that passes through the area swept out by the blades.

kinetic energy = ... [2]

(ii) Suggest why some of the kinetic energy of the air that passes through the circular area swept out by the blades is **not** converted into electrical energy.

.....

..... [1]

[Total: 7]

www.root19.com +91 - 9969 353 301

3 **(a)** An object is moving in a straight line at constant speed.

State **three** ways in which a force may change the motion of the object.

1 .....

2 .....

3 .....
[2]

(b) Fig. 3.1 shows an object suspended from two ropes. The weight of the object is 360 N. The magnitude of the tension in each rope is *T*.

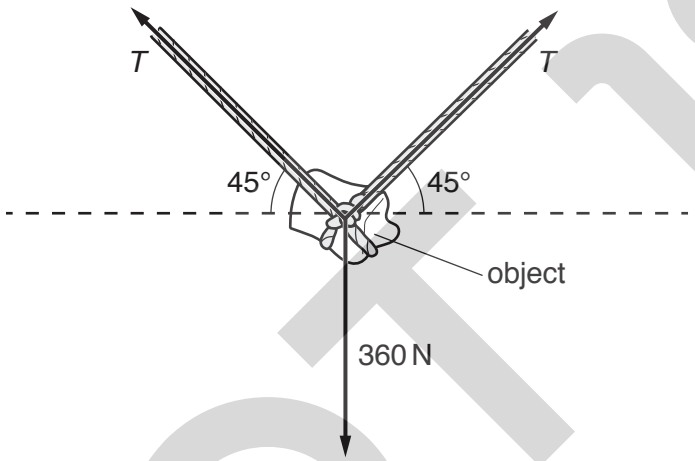

Fig. 3.1

In the space below, determine the tension *T* by drawing a vector diagram of the forces acting on the object.

State the scale you have used.

scale .....

T = ...
[5]

[Total: 7]

www.root19.com +91 - 9969 353 391

4 **(a)** Fig. 4.1 shows a mercury barometer. The tube containing the mercury is vertical.

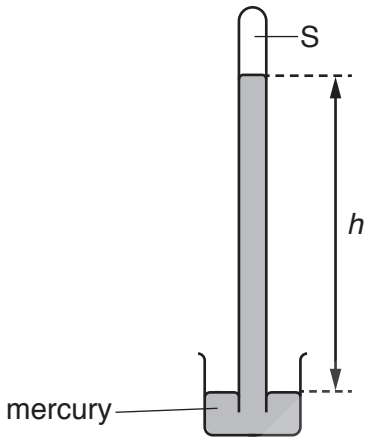

Fig. 4.1

(i) The height *h* indicates a value of the atmospheric pressure.

State what is contained in the space labelled S.

..... [1]

(ii) On a particular day the atmospheric pressure is 1.02×10^5 Pa. The density of mercury is 13 600 kg / m^3.

Calculate the value of *h* indicated by the barometer.

h = ... [2]

(iii) The tube containing mercury is now tilted so that it makes an angle of 10° with the vertical. After tilting, there continues to be a space above the mercury in the tube.

State and explain whether the vertical height of mercury in the tube is smaller, the same, or greater than the value calculated in **(a)(ii)**.

.....

.....

..... [2]

(b) Another mercury barometer in the same room at the same time shows a lower value of *h* than the barometer in **(a)**.

Suggest and explain a reason for the lower value.

.....

.....

..... [2]

[Total: 7]

www.root19.com +91 - 9969 353 301

5 **(a)** State the values of the *fixed points* of a temperature scale.

..... [1]

(b) **(i)** The graduations on a liquid-in-glass thermometer are equally spaced.

For the equal spacing of the graduations to be correct, state:

1. an assumption that is made about the liquid in the thermometer

.....

2. an assumption that is made about the structure of the thermometer.

.....
[2]

(ii) Liquid-in-glass thermometer A has a greater range than liquid-in-glass thermometer B.

State **one** way the design of thermometer A is different from thermometer B.

.....

..... [1]

(iii) Liquid-in-glass thermometer C has a greater sensitivity than liquid-in-glass thermometer D.

State **one** way the design of thermometer C is different from thermometer D.

.....

..... [1]

www.root19.com +91 - 9969 353 391

(c) **(i)** In the space provided, draw a labelled diagram of a thermocouple thermometer.

[3]

(ii) Suggest when a thermocouple thermometer is more suitable than a liquid-in-glass thermometer.

.....

..... [1]

[Total: 9]

© UCLES 2019

www.root19.com +91 - 9969 353 301

6 An electrical heater is placed on the floor of a room in a house. The heater is switched on.

(a) State the main process by which thermal energy is transferred to the air in all parts of the room.

..... [1]

(b) The heater has a power of 1.5 kW. The air in the room has a mass of 65 kg. The specific heat capacity of air is 720 J / (kg °C).

(i) Calculate the time it takes for this heater to raise the temperature of the air in the room from 8.0 °C to 15.0 °C.

time = ... [4]

(ii) State **two** reasons why the time calculated in **(b)(i)** is smaller than the actual time taken to raise the temperature of the air in the room from 8.0 °C to 15.0 °C.

1 .....

.....

2 .....

.....
[2]

[Total: 7]

© UCLES 2019
www.root19.com

+91 - 9969 353 391

7 **(a)** In Fig. 7.1, the small circles represent molecules. The arrows refer to the change of state from the arrangement of molecules on the left to the arrangement of molecules on the right.

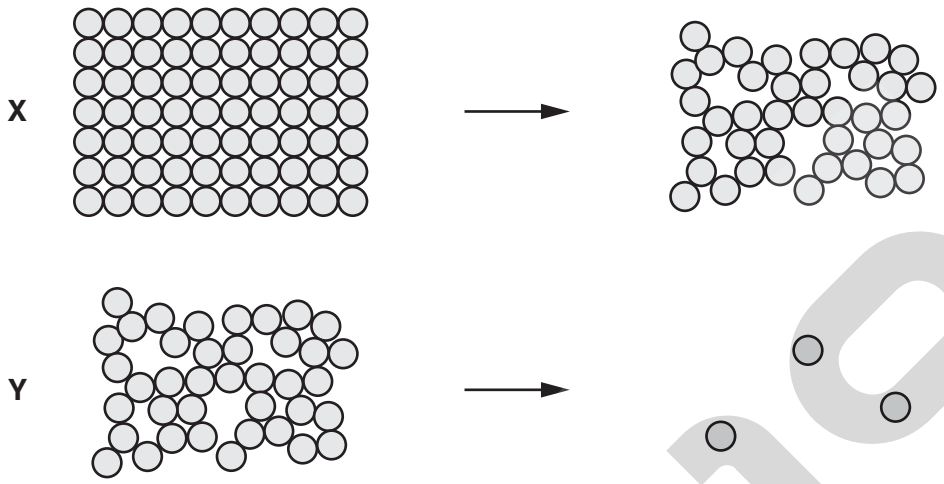

Fig. 7.1

Complete the following by writing solid, liquid or gas in each of the blank spaces.

1. Change of state **X** is from ..... to ..... .

2. Change of state **Y** is from ..... to ..... .

[2]

(b) Explain, in terms of the forces between their molecules, why gases expand more than solids when they undergo the same rise in temperature.

.....

.....

.....

..... [2]

(c) A cylinder of volume $0.012\,m^3$ contains a compressed gas at a pressure of 1.8×10^6 Pa. A valve is opened and all the compressed gas escapes from the cylinder into the atmosphere.

The temperature of the gas does not change.

Calculate the volume that the **escaped** gas occupies at the atmospheric pressure of 1.0×10^5 Pa.

volume = ... [3]

[Total: 7]

www.root19.com +91 - 9969 353 301

8 Fig. 8.1 shows parallel wavefronts of a light wave in ice. The wavefronts are incident on a boundary with air.

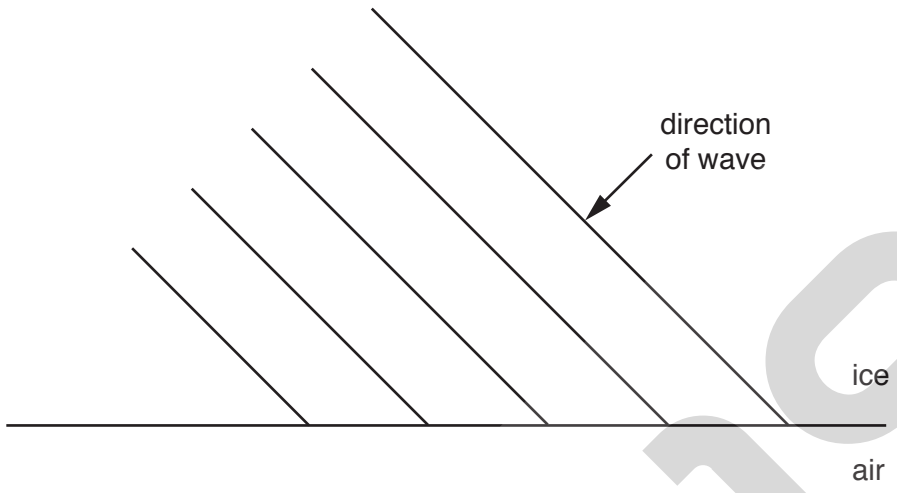

Fig. 8.1

The speed of the light wave in air is 3.0×10^8 m/s. The refractive index of the ice is 1.3.

(a) On Fig. 8.1:

(i) draw the wavefronts of the wave that passes into the air [3]

(ii) draw arrows to show the direction of travel of the refracted wave [1]

(iii) label the angle of incidence *i* and the angle of refraction *r*. [1]

(b) Calculate the speed of the light wave in the ice.

speed = ... [2]

[Total: 7]

www.root19.com +91 - 9969 353 391

BLANK PAGE

© UCLES 2019
www.root19.com

+91 - 9969 353 301

9 Fig. 9.1 shows current-potential difference (p.d.) graphs for a resistor and for a thermistor.

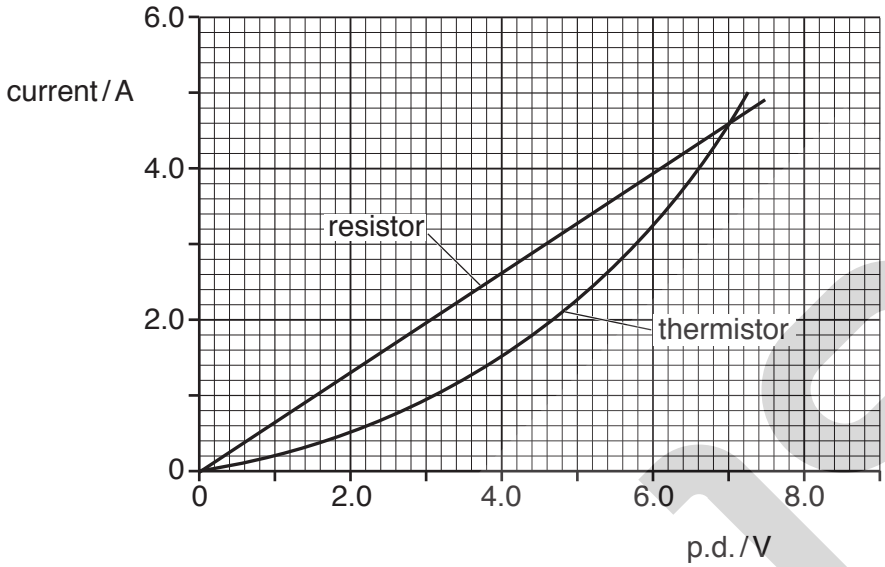

Fig. 9.1

(a) Calculate the resistance of the thermistor when the p.d. across it is 7.0 V.

resistance = ... [2]

(b) In Table 9.1, tick the boxes that indicate the effect on the resistances of the resistor and of the thermistor when the p.d. across them is increased from 0 to 7.0 V.

Table 9.1

component	resistance increases	resistance is constant	resistance decreases
resistor			
thermistor			

[2]

www.root19.com +91 - 9969 353 391

(c) The thermistor and the resistor are connected in **parallel** to a 7.0 V supply.

Calculate:

(i) the current from the supply

current = ... [2]

(ii) the energy transferred from the supply in 5.0 minutes.

energy = ... [2]

[Total: 8]

© UCLES 2019

www.root19.com
+91 - 9969 353 301

10 **(a)** The electrical energy produced by a power station is transmitted over long distances at a very high voltage.

Explain why a very high voltage is used.

.....

.....

.....

.....

.....

..... [3]

(b) Fig. 10.1 represents a transformer.

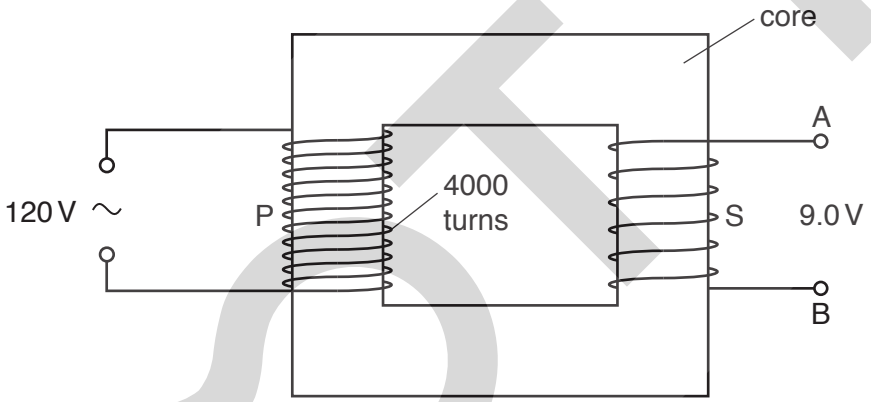

Fig. 10.1

(i) The primary coil P has 4000 turns and an input of 120 V. The secondary coil S has an output of 9.0 V.

Calculate the number of turns in the secondary coil.

number = ... [2]

(ii) State a suitable material for the core of the transformer.

..... [1]

[Total: 6]

www.root19.com +91 - 9969 353 391

11 **(a)** **(i)** One isotope of iridium-194 is represented by

$$^{194}_{77}\mathrm{Ir}$$

This isotope decays by β-emission to a stable isotope of platinum (Pt).

Complete the nuclide equation for this decay.

$$^{194}_{77}\mathrm{Ir} \rightarrow \,^{\cdots\cdots}_{\cdots\cdots}\mathrm{Pt} + \,^{\cdots\cdots}_{\cdots\cdots}\beta$$

[3]

(ii) The half-life of iridium-194 is 19 hours. A sample of iridium-194 has an initial count-rate of 1100 counts / min.

Calculate the count-rate from this sample after 38 hours.

count-rate = ... [2]

(b) State **two** ways in which γ-emission differs from β-emission.

1 .....

2 .....

[2]

[Total: 7]

© UCLES 2019

www.root19.com +91 - 9969 353 391

BLANK PAGE

Permission to reproduce items where third-party owned material protected by copyright is included has been sought and cleared where possible. Every reasonable effort has been made by the publisher (UCLES) to trace copyright holders, but if any items requiring clearance have unwittingly been included, the publisher will be pleased to make amends at the earliest possible opportunity.

To avoid the issue of disclosure of answer-related information to candidates, all copyright acknowledgements are reproduced online in the Cambridge Assessment International Education Copyright Acknowledgements Booklet. This is produced for each series of examinations and is freely available to download at www.cambridgeinternational.org after the live examination series.

Cambridge Assessment International Education is part of the Cambridge Assessment Group. Cambridge Assessment is the brand name of the University of Cambridge Local Examinations Syndicate (UCLES), which itself is a department of the University of Cambridge.

www.root19.com +91 - 9969 353 391